HANGER FANS FOR UNDERGROUND PARKING LOT

Characteristics

- Fan and louvers integrated in a single cabinet for ease of handling and installation
- Compared to conventional large diameter duct, height of the fan lowered by diversely distributed fan; thus, possible to be installed on the ceiling
- Construction fee reduced due to unnecessary separate room for fan
- Lower electricity consumed due to the adoption of high-efficiency motors

Product data

MODEL	DRIVE TYPE	Power source		Motor ower		Static Pressure		Air Volume	Page
		Phase	V	kw	HP	Pa	mmAq	㎥/h	
ASHF-5000	V-BELT	∮3	220/380	1.5	2	98~147	10~15	5000	*147p*
	DIRECT			1.12	1.5				
ASHF-7500	V-BELT	∮3	220/380	1.5	2	98~147	10~15	7500	*148p*
	DIRECT			1.12	1.5				
ASHF-10000	V-BELT	∮3	220/380	2.2	3	98~147	10~15	10000	*149p*
	DIREC)								
ASHF-15000	V-BELT	∮3	220/380	2.2	3	98~147	10~15	15000	*150p*
	DIRECT			3.7	5				
ASHF-20000	V-BELT	∮3	220/380	3.7	5	98~147	10~15	20000	*151p*
ASHF-25000	V-BELT	∮3	220/380	5.5	7.5	98~147	10~15	25000	
ASHF-30000	V-BELT	∮3	220/380	7.5	10	98~147	10~15	30000	*152p*
ASHF-35000	V-BELT	∮3	220/380	7.5	10	98~147	10~15	35000	
ASHF-40000	V-BELT	∮3	220/380	7.5	10	98~147	10~15	45000	*153p*
ASHF-45000	V-BELT	∮3	220/380	7.5	10	98~147	10~15	45000	
ASHF-50000	V-BELT	∮3	220/380	11	15	98~147	10~15	50000	*154p*

• ASHF-5000 (V-BELT)

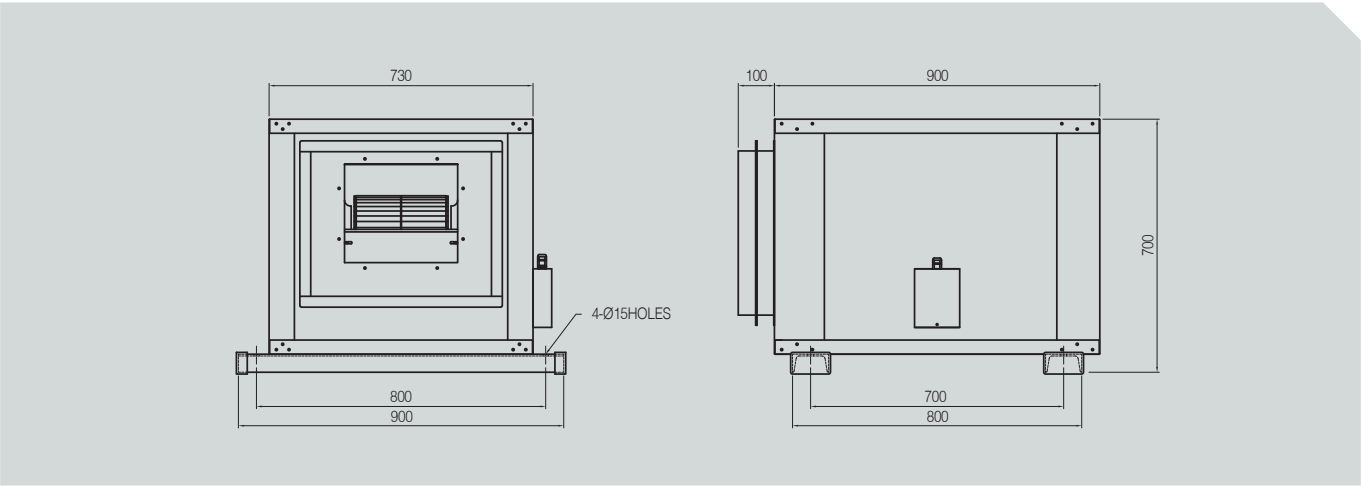

Power source			Static Pressure	Air Volume	Motor power	Current
Phase	V	Hz	Pa	CMH	KW	A
∮3	220 / 380	60 / 50Hz	147	5000	1.5	3

• ASHF-5000 (DIRECT)

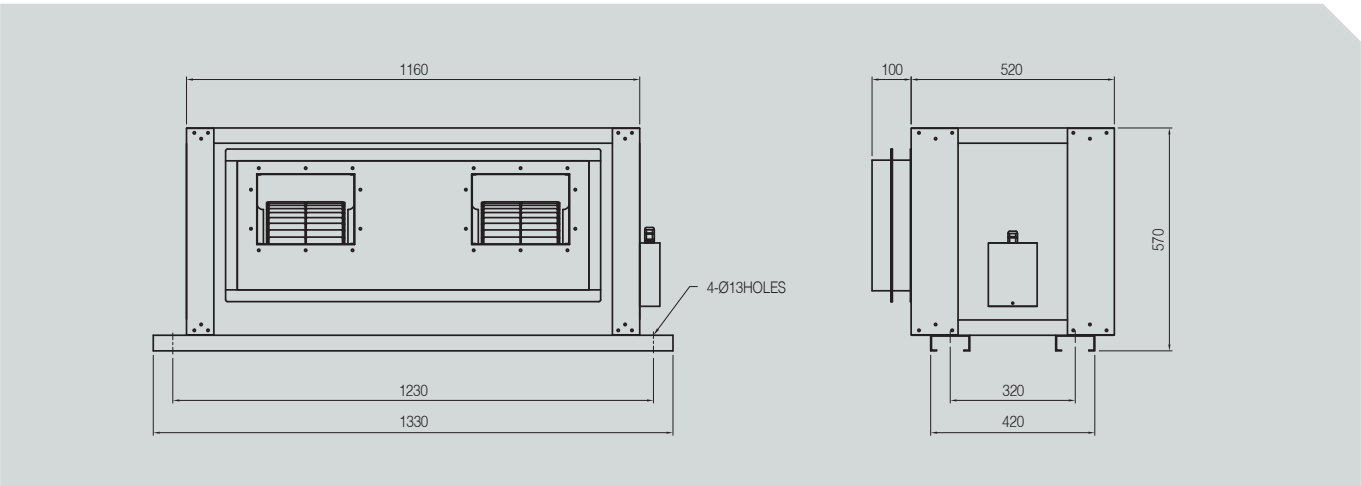

Power source			Static Pressure	Air Volume	Motor power	Current
Phase	V	Hz	Pa	CMH	KW	A
∮3	220 / 380	60Hz	147	5000	1.12	3

• ASHF-7500 (V-BELT)

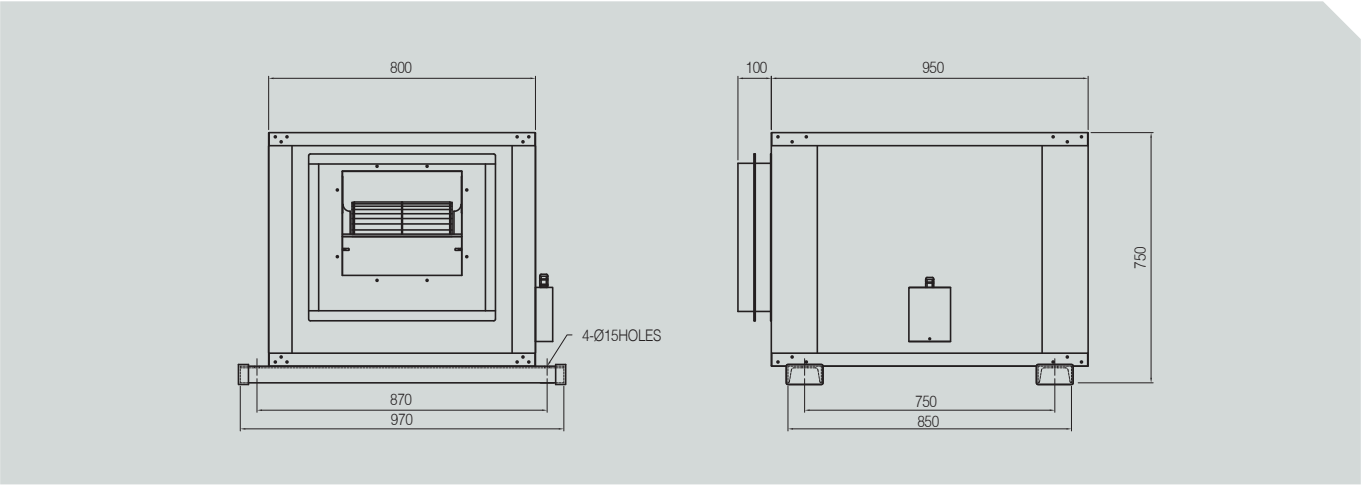

Power source			Static Pressure	Air Volume	Motor power	Current
Phase	V	Hz	Pa	CMH	KW	A
∮ 3	220 / 380	60 / 50Hz	147	7500	1.5	3

• ASHF-7500 (DIRECT)

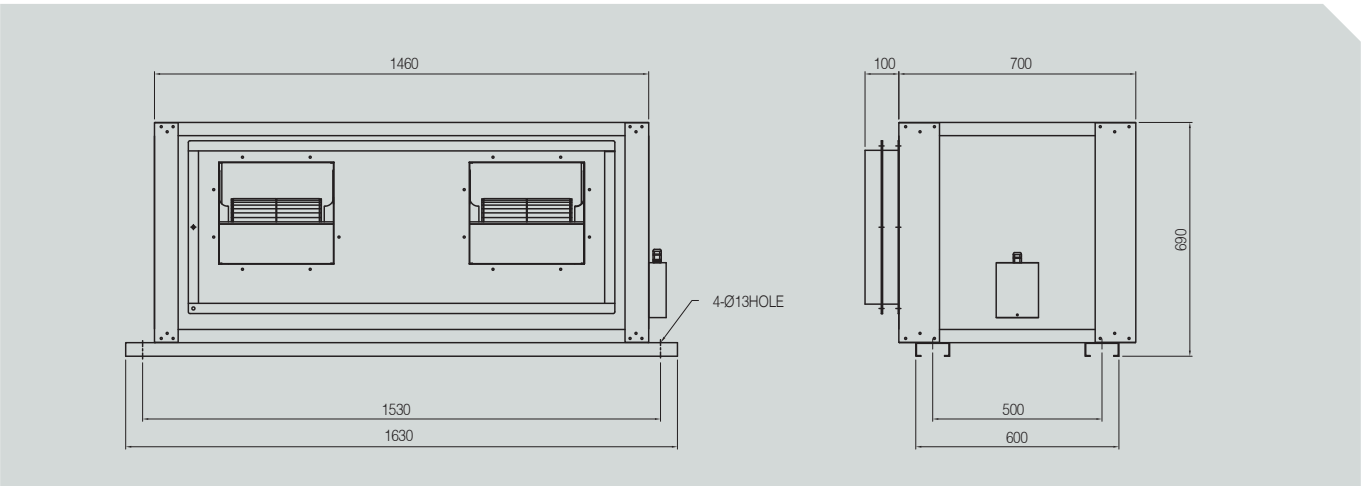

Power source			Static Pressure	Air Volume	Motor power	Current
Phase	V	Hz	Pa	CMH	KW	A
∮ 3	220 / 380	60Hz	147	7500	1.12	3.5

• ASHF-10000 (V-BELT)

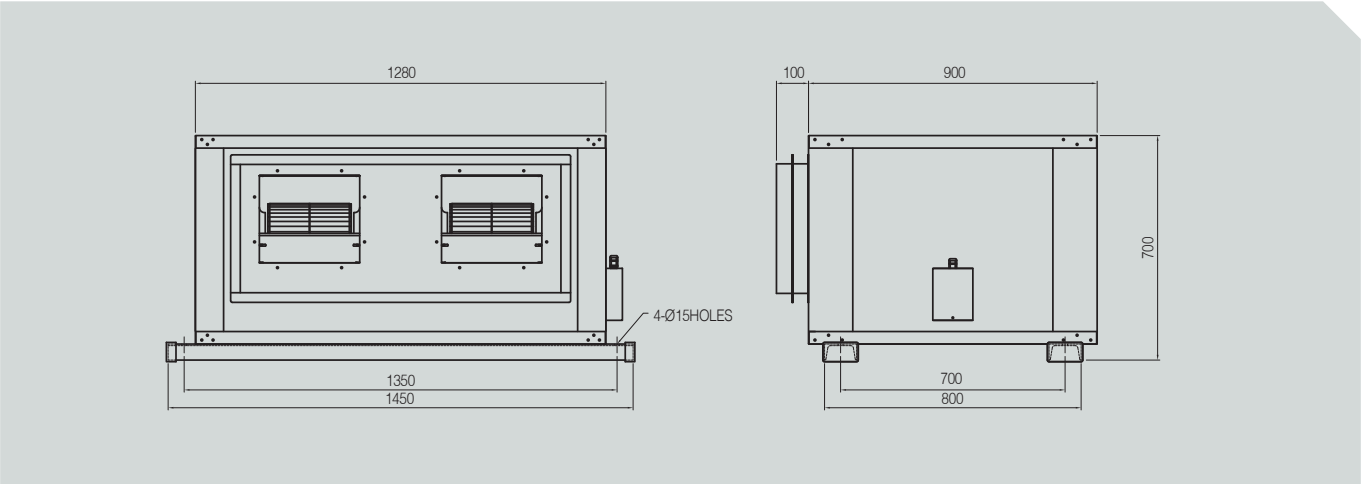

Power source			Static Pressure	Air Volume	Motor power	Current
Phase	V	Hz	Pa	CMH	KW	A
∮3	220 / 380	60 / 50Hz	147	10000	2.2	4

• ASHF-10000 (DIRECT)

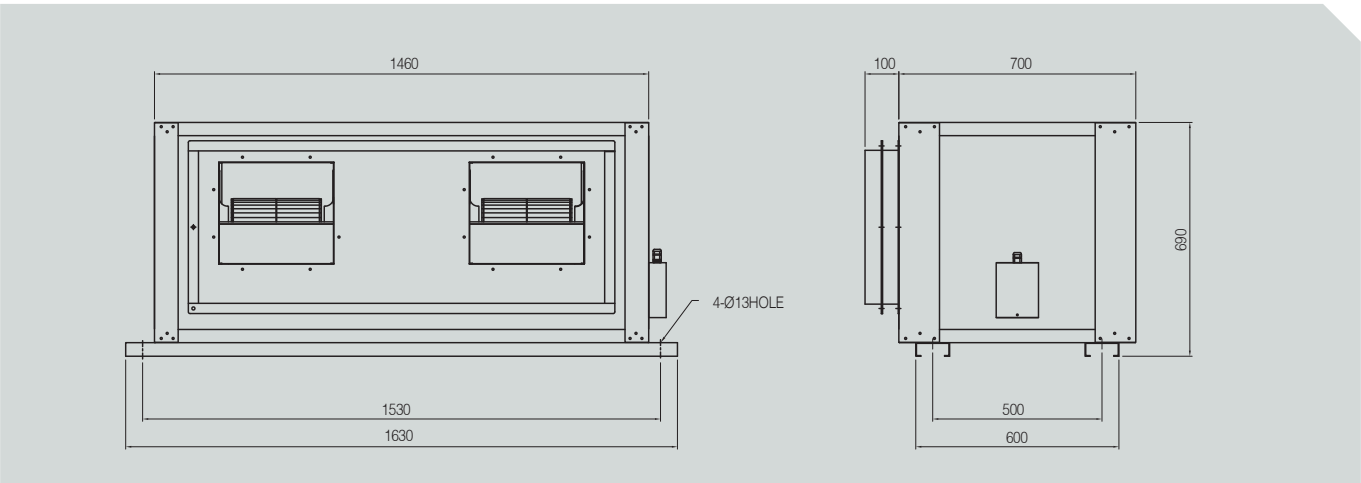

Power source			Static Pressure	Air Volume	Motor power	Current
Phase	V	Hz	Pa	CMH	KW	A
∮3	220 / 380	60Hz	147	10000	2.2	5.6

• ASHF-15000 (V-BELT)

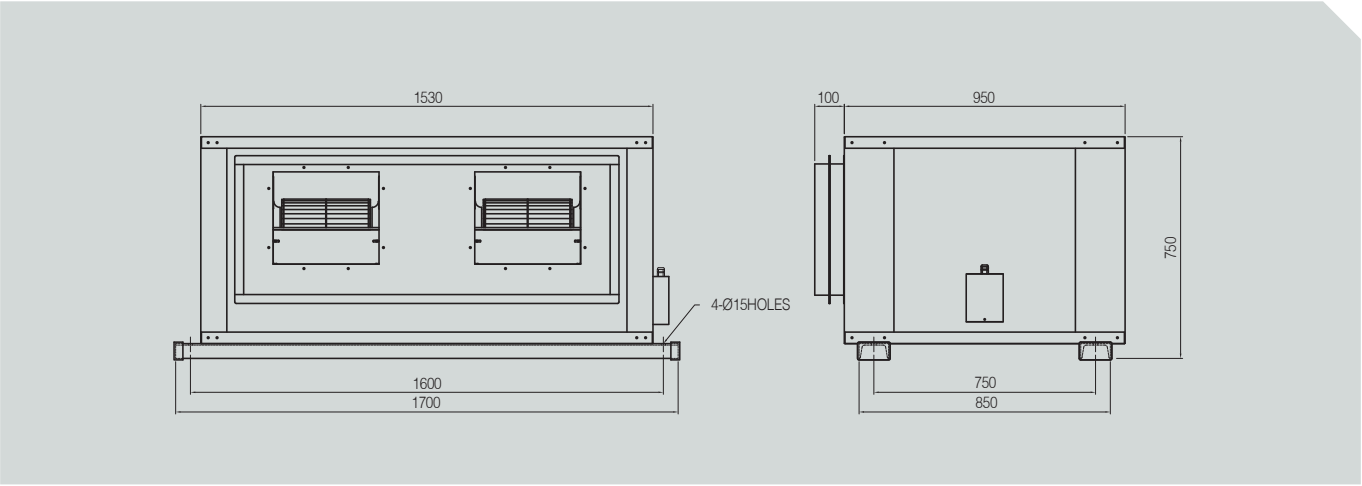

Power source			Static Pressure	Air Volume	Motor power	Current
Phase	V	Hz	Pa	CMH	KW	A
∮ 3	220 / 380	60 / 50Hz	147	15000	3.7	7

• ASHF-15000 (DIRECT)

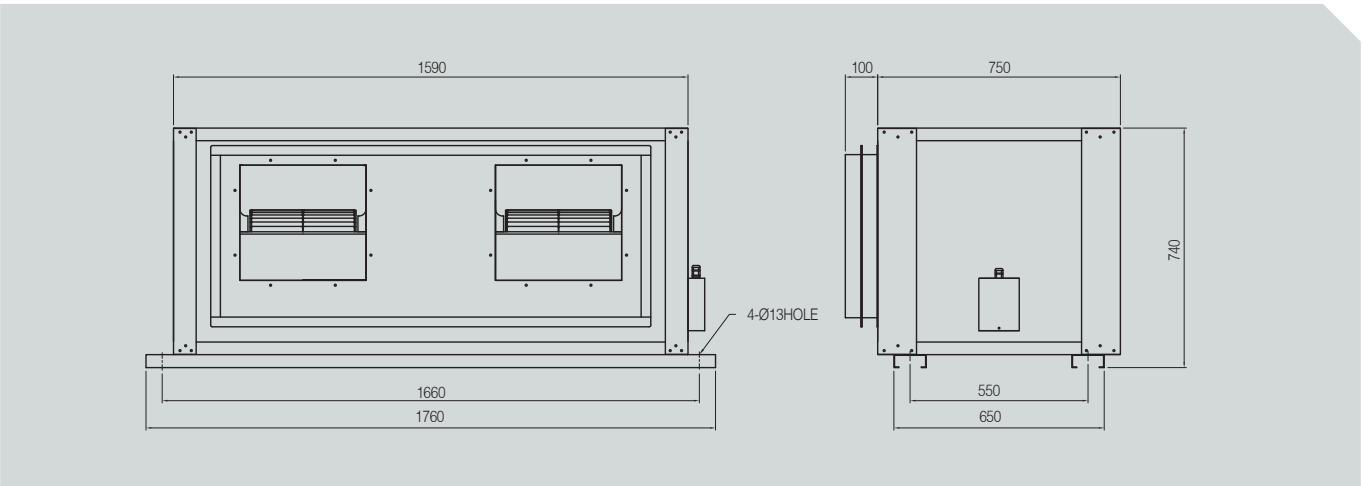

Power source			Static Pressure	Air Volume	Motor power	Current
Phase	V	Hz	Pa	CMH	KW	A
∮ 3	220 / 380	60Hz	147	15000	2.2	9.2

• ASHF-20000 (V-BELT)

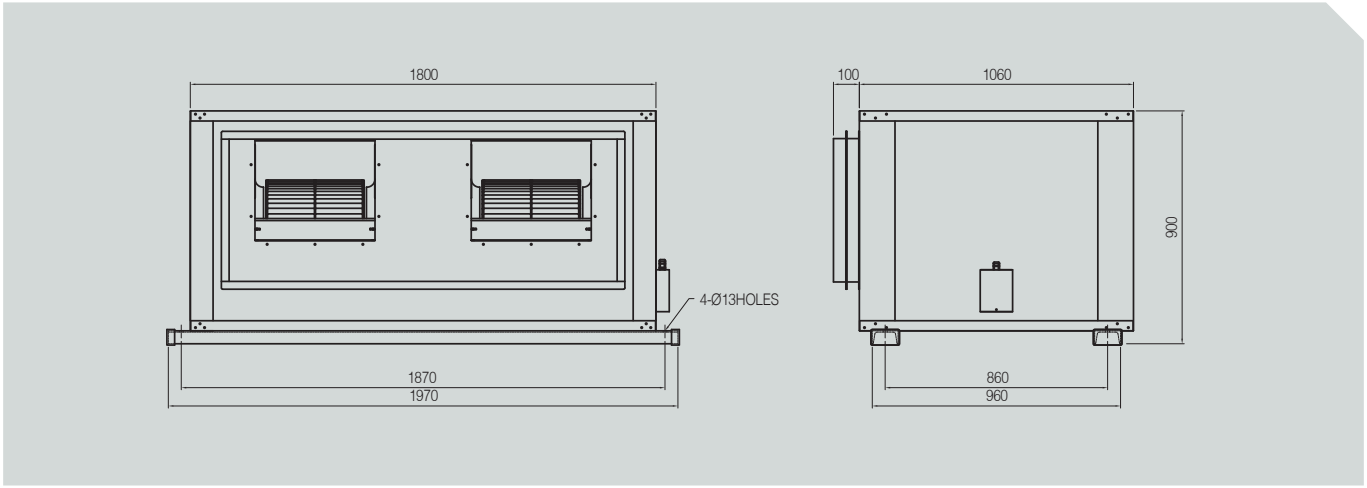

Power source			Static Pressure	Air Volume	Motor power	Current
Phase	V	Hz	Pa	CMH	KW	A
∮3	220 / 380	60 / 50Hz	147	20000	3.7	6.1

• ASHF-25000 (V-BELT)

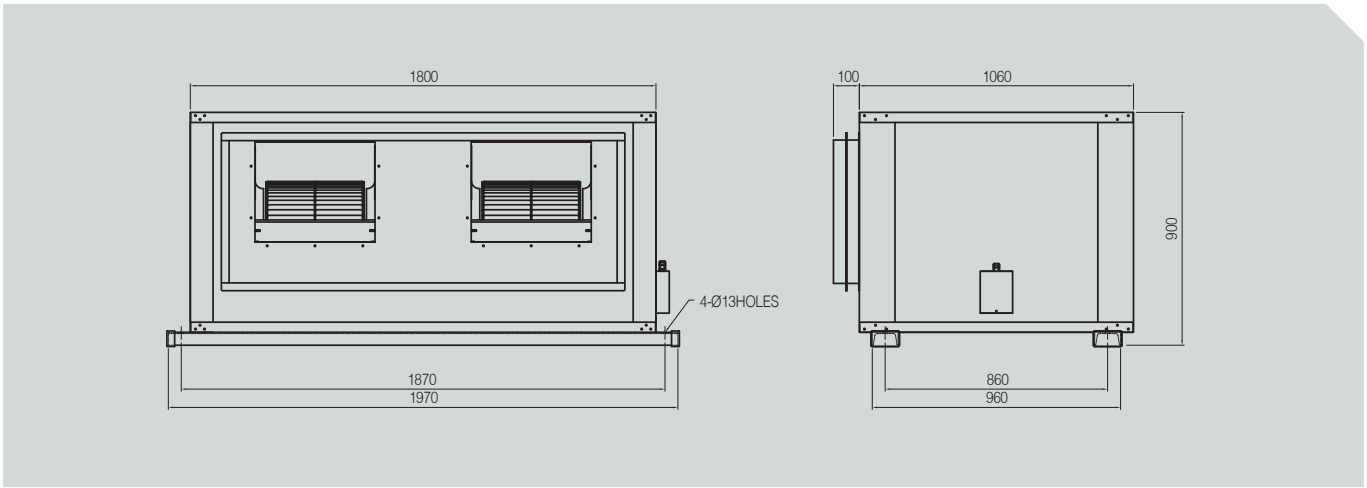

Power source			Static Pressure	Air Volume	Motor power	Current
Phase	V	Hz	Pa	CMH	KW	A
∮3	220 / 380	60 / 50Hz	147	25000	5.5	12.1

• ASHF-30000 (V-BELT)

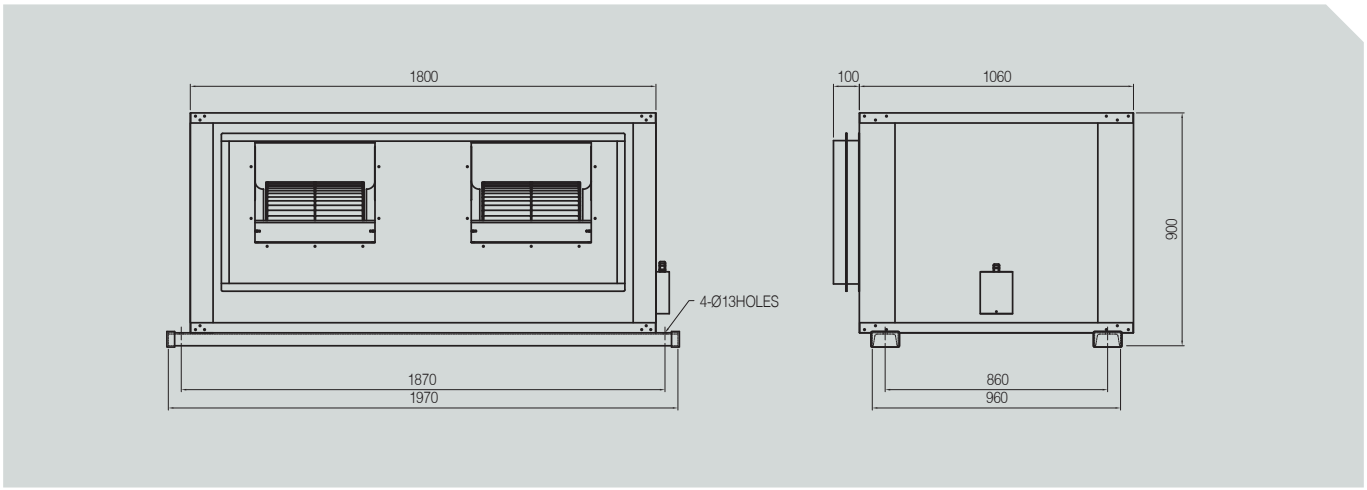

Power source			Static Pressure	Air Volume	Motor power	Current
Phase	V	Hz	Pa	CMH	KW	A
∮ 3	220 / 380	60 / 50Hz	147	30000	7.5	16.3

• ASHF-35000 (V-BELT)

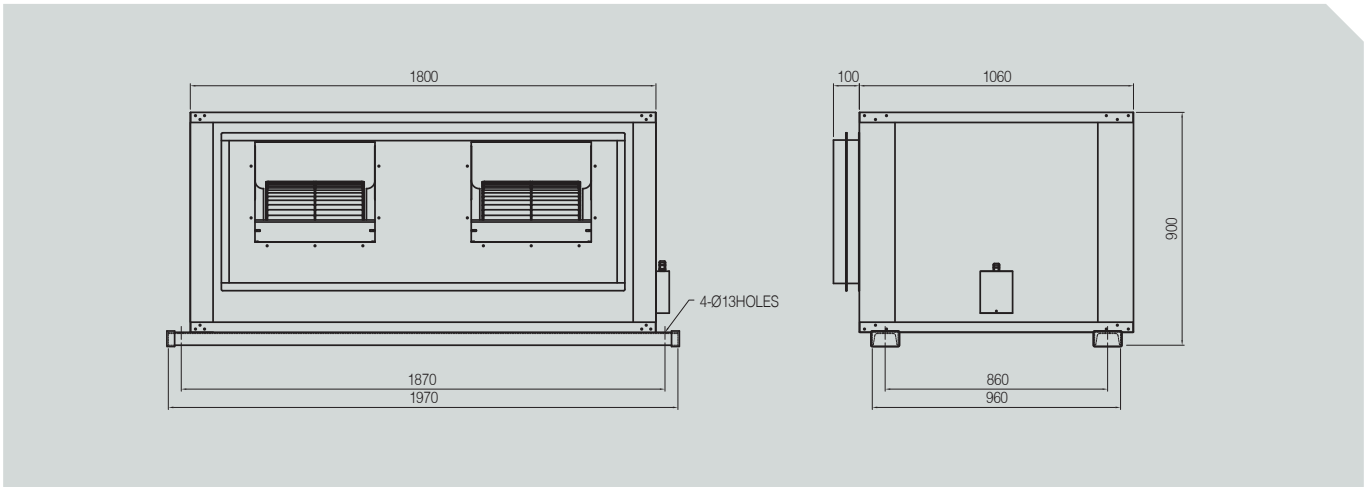

Power source			Static Pressure	Air Volume	Motor power	Current
Phase	V	Hz	Pa	CMH	KW	A
∮ 3	220 / 380	60 / 50Hz	147	35000	7.5	16.3

• ASHF-40000 (V-BELT)

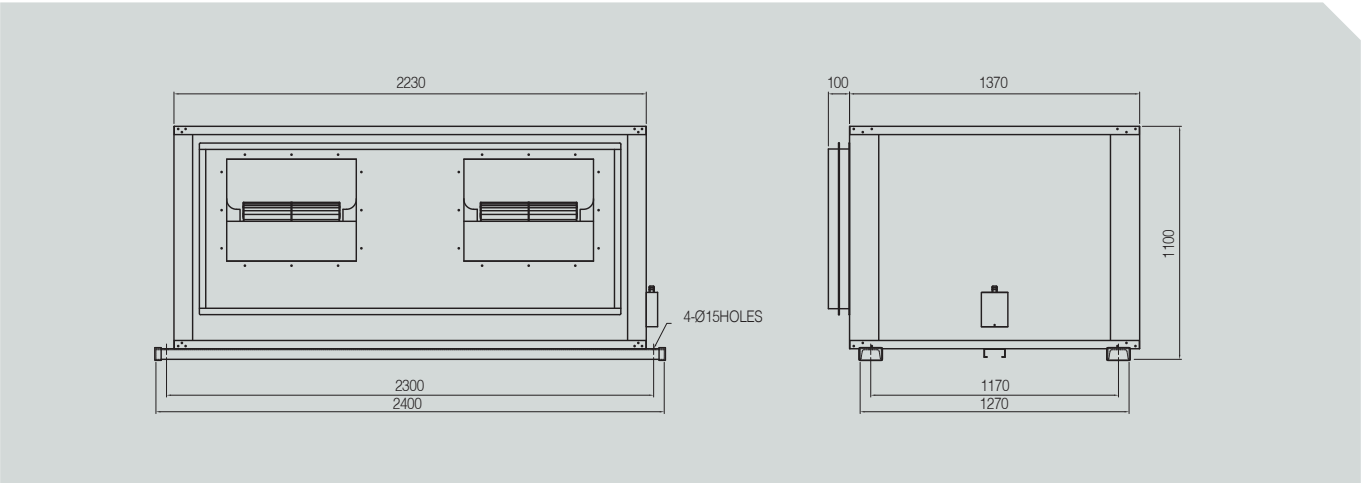

Power source			Static Pressure	Air Volume	Motor power	Current
Phase	V	Hz	Pa	CMH	KW	A
∮3	220 / 380	60 / 50Hz	147	40000	7.5	16.3

• ASHF-45000 (V-BELT)

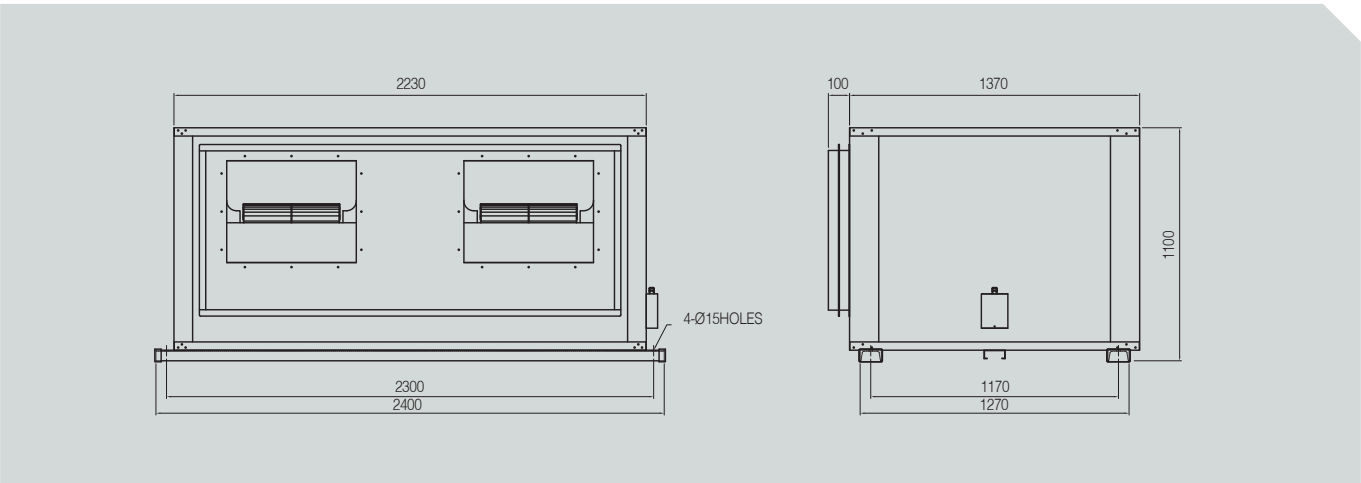

Power source			Static Pressure	Air Volume	Motor power	Current
Phase	V	Hz	Pa	CMH	KW	A
∮3	220 / 380	60 / 50Hz	147	45000	7.5	16.3

• ASHF-50000 (V-BELT)

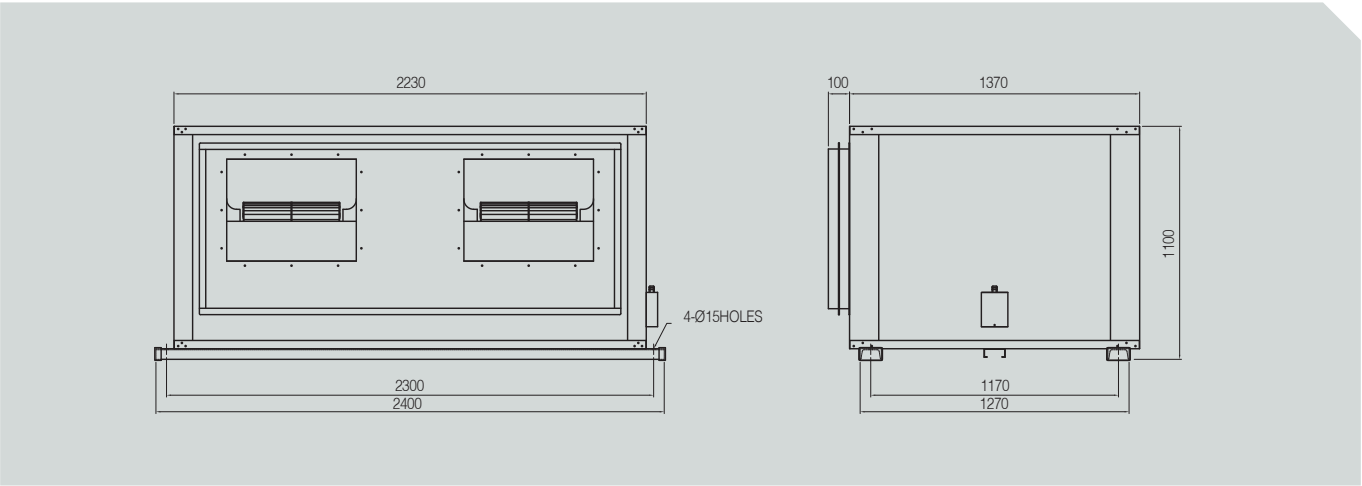

Power source			Static Pressure	Air Volume	Motor power	Current
Phase	V	Hz	Pa	CMH	KW	A
∮ 3	220 / 380	60 / 50Hz	147	50000	11	23.2